Ollscoil Chathair
Bhaile Átha Cliath
Dublin City University

Purposefully different,

consistently excellent

Welcome to EEN1037: Web Applications Development

Relational Database Management Systems (RDBMS)

Week 5

Joe Mullally

Ollscoil Chathair
Bhaile Átha Cliath
Dublin City University

Web Application High level Overview

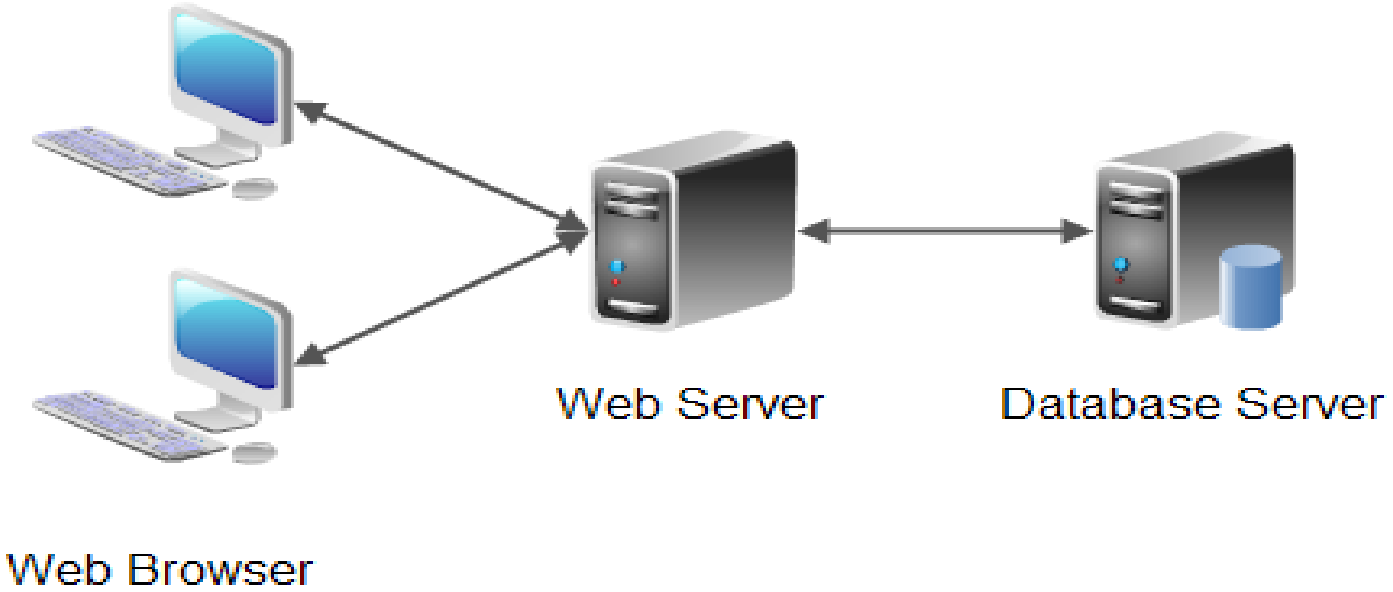

- Client side: HTML, CSS, Javascript (Jquery, Bootstrap etc)
- Server side: Java + Spring Boot + Hibernate ORM
- Database: MySQL
- Development Tools: Visual Studio Code, DBeaver

DCU
Ollscoil Chathair
Bhaile Átha Cliath
Dublin City University

What will I learn?

- What is a relational database?
- What are relational Database Management Systems?
- SQL Query Language?
- How to create a database?

- Learn SQL Query Syntax

Ollscoil Chathair
Bhaile Átha Cliath
Dublin City University

Relational Databases

- Relational DBMSs organise data into tables, which can be linked by common information, to make data storage more efficient
- Analagous to a traditional filing system
  - database – the complete collection of information (ie. cabinet)
  - tables – a group of data items with a common theme (ie. Group of folders)
  - records – an individual data item (ie. An individual folder)
  - fields – a separate piece of information describing the data item (ie. sections of the file)

DCU
Ollscoil Chathair
Bhaile Átha Cliath
Dublin City University

Relational Databases

- Many RDBMS are available

- Such as (in no particular order)
  - Oracle
  - MySQL
  - Microsoft SQL Server
  - Postgre SQL
  - …

- We will use MySQL Community Server for this module.
  - Download MYSQL Community Server depending on your OS and follow the installation instructions
  - https://dev.mysql.com/downloads/mysql/
  - Don’t set the root password, by default it is empty

- You can use DBeaver which will be Visual Interface for MySQL Server
  - Download DBeaver depending on your OS and follow the installation instructions
  - https://dbeaver.io/
  - If the latest version is not supported by your OS, you can install an older version.

DCU
Ollscoil Chathair
Bhaile Átha Cliath
Dublin City University

Tables

- Tables form the organising principle in a relational database.
- Each table within a schema has a unique table name

CUSTOMERS table

ID	SURNAME	FIRSTNAME	EMAIL	COUNTRY	PHONE
2174	Smith	Peter	smithp@lucent.com	Ireland	+353 1 4382321
2177	Murphy	Joe	joe.murphy@microsoft.com	Ireland	+353 97 34312
2099	Jones	Mary	mary.jones@hotmail.com	United States	+555 33 4444444
2200	McFadden	Jack	jack.mcfadden@dcu.ie	Scotland	+666 11 222222
2311	Corcoran	Sheila	scorco@ireland.com	Ireland	+353 1 8903242
1983	Ryan	Ann	ann.ryan@yahoo.com	England	+777 1 3234343

- Each horizontal row represents a single physical entity (eg. A customer)
- Each vertical column represents one item of data for each customer

DCU
Ollscoil Chathair
Bhaile Átha Cliath
Dublin City University

Tables - Columns

- Each column holds the same data type
- Example: SURNAME column holds variable length column strings
  ID column values are integers
- Each column has a column name, each column must have a different name in an individual table
- Columns have a left-to-right order, which is defined on table creation
- Tables must have at least one column and in theory (ANSI/ISO) no maximum
- Practical implementations support 255+ columns minimum

DCU
Ollscoil Chathair
Bhaile Átha Cliath
Dublin City University

Tables - Row

- Rows (unlike columns) are not stored in any particular order
- No guarantee that rows will be listed in the same order twice
- Is possible to add filters and/or sort data using SQL statements
- A table can have 0 rows (known as an empty table)
- ANSI/ISO standard does not limit the maximum number of rows
- Most database implementations will allow a table to grow until it exhausts the available disk space on the computer

DCU
Ollscoil Chathair
Bhaile Átha Cliath
Dublin City University

Primary Keys

- Because rows of a relational table are unordered, you cannot select a specific row by its position in the table

- There is no “first row”, “last row” or “thirteenth row”

-> We use the concept of a primary key!

- In a well-designed relational database, every table has some column or combination of columns whose values uniquely identify each row in the table -> the primary key

- In practice “ID numbers”, such as employee numbers, student numbers, product Ids, barcodes etc. are chosen as primary keys

- Consider our previous table again -> why do we not use SURNAME or FIRSTNAME/SURNAME as a primary key?

- Consider the next table – what can be used as a primary key?

DCU
Ollscoil Chathair
Bhaile Átha Cliath
Dublin City University

Primary Keys

CARS table

YEAR	COUNTYCODE	CNUMBER	MODEL	COLOUR	TRADEPRICE
0	D	7733	Honda Civic	Silver	10000
0	L	1733	Volkswagon Bora	Blue	9400
99	MH	90430	Toyota Avensis	Green	9600
90	C	15432	Toyota Corolla	Green	5600
95	KY	1061	Ford Fiesta	Grey	3900
0	D	32909	Ford Focus	Black	10300
2	DL	6328	Peugot 306	Red	12000
2	C	4423	Honda Civic	Silver	14500
3	MH	7733	Suzuki Swift	White	8100

DCU
Ollscoil Chathair
Bhaile Átha Cliath
Dublin City University

Primary Keys

- Primary keys can be defined by a combination of columns
- In previous example, no one column can be considered unique
- A table where every row is different from all other rows is called a relation in mathematical terms

  → Relational Database comes from this term

DCU
Ollscoil Chathair
Bhaile Átha Cliath
Dublin City University

Foreign Keys

- A column in one table whose value matches the primary key in some other table is called a foreign key

CUSTOMERS table

ID	SURNAME	FIRSTNAME	EMAIL	COUNTRY	PHONE
2174	Smith	Peter	smithp@lucent.com	Ireland	+353 1 4382321
2177	Murphy	Joe	joe.murphy@microsoft.com	Ireland	+353 97 34312
2099	Jones	Mary	mary.jones@hotmail.com	United States	+555 33 4444444
2200	McFadden	Jack	jack.mcfadden@dcu.ie	Scotland	+666 11 222222
2311	Corcoran	Sheila	scorco@ireland.com	Ireland	+353 1 8903242
1983	Ryan	Ann	ann.ryan@yahoo.com	England	+777 1 3234343

PRIMARY KEY

SALES table

SALE_ID	YEAR	CC	NUM	VALUE	SALESPERSON	PURCHASER
844122	90	C	15432	6100	Alan Malone	1983
584329	0	D	7733	12400	Lisa Smith	2200
993321	3	MH	7733	9500	Alan Malone	2099
666481	0	D	32909	12500	Roger Barry	2177
598020	2	C	4423	15800	Alan Malone	2174
384739	99	MH	90430	11200	Roger Barry	2311
348993	0	L	1733	10000	Lisa Smith	2177
667781	2	DL	6328	12400	Roger Barry	1983

PRIMARY KEY

FOREIGN KEY

DCU
Ollscoil Chathair
Bhaile Átha Cliath
Dublin City University

Foreign Keys

- PURCHASER column is a foreign key for the CUSTOMERS table
- Primary key and foreign key create a parent/child relationship between the tables that contain them
- Similar to the primary key, the foreign key can be composed of a combination of columns
- Will always be a combination of columns where the parent has a multiple column primary key
- Naturally all the types for the individual columns must have the same data types

DCU
Ollscoil Chathair
Bhaile Átha Cliath
Dublin City University

Foreign-Keys: Multiple Parent/Child Relationships Combination of Columns

CUSTOMERS table

ID	SURNAME	FIRSTNAME	EMAIL	COUNTRY	PHONE
2174	Smith	Peter	smithp@lucent.com	Ireland	+353 1 4382321
2177	Murphy	Joe	joe.murphy@microsoft.com	Ireland	+353 97 34312
2099	Jones	Mary	mary.jones@hotmail.com	United States	+555 33 4444444
2200	McFadden	Jack	jack.mcfadden@dcu.ie	Scotland	+666 11 222222
2311	Corcoran	Sheila	scorco@ireland.com	Ireland	+353 1 8903242
1983	Ryan	Ann	ann.ryan@yahoo.com	England	+777 1 3234343

PRIMARY KEY

SALES table

SALE_ID	YEAR	CC	NUM	VALUE	SALESPERSON	PURCHASER
844122	90	C	15432	6100	Alan Malone	1983
584329	0	D	7733	12400	Lisa Smith	2200
993321	3	MH	7733	9500	Alan Malone	2099
666481	0	D	32909	12500	Roger Barry	2177
598020	2	C	4423	15800	Alan Malone	2174
384739	99	MH	90430	11200	Roger Barry	2311
[illegible]	0	L	1733	10000	Lisa Smith	2177
667781	2	DL	6328	12400	Roger Barry	1983

PRIMARY KEY FOREIGN KEY FOREIGN KEY

CARS table

YEAR	COUNTYCODE	CNUMBER	MODEL	COLOUR	TRADEPRICE
0	D	7733	Honda Civic	Silver	10000
0	L	1733	Volkswagon Bora	Blue	9400
99	MH	90430	Toyota Avensis	Green	9600
90	C	15432	Toyota Corolla	Green	5600
95	KY	1061	Ford Fiesta	Grey	3900
0	D	32909	Ford Focus	Black	10300
2	DL	6328	Peugot 306	Red	12000
2	C	4423	Honda Civic	Silver	14500
3	MH	7733	Suzuki Swift	White	8100

PRIMARY KEY

DCU
Ollscoil Chathair
Bhaile Átha Cliath
Dublin City University

Structured Query Language (SQL)

- SQL is an ISO standard powerful language consisting of a few commands

- Developed by IBM in the mid-1970s to serve as an “English-like” front-end query language to the “System R” relational database prototype

- Main body of SQL language consists of about 40 statements

- SQL is a “declarative” language by which a user or application can specify what data they want

- Does not dictate to the database engine how to retrieve the data, nor how to navigate through the database

  -> Details of how the database has stored/organised the data is hidden from the user

DCU
Ollscoil Chathair
Bhaile Átha Cliath
Dublin City University

SQL Statement

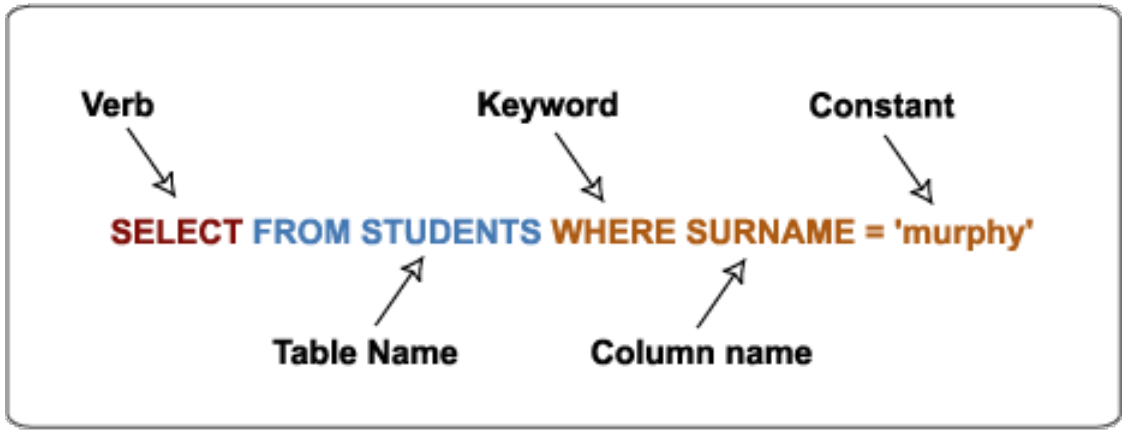

- Every statement begins with a verb, describing what statement does
- A statement continues with one or more clauses
- Every clause begins with a keyword, such as WHERE, FROM or INTO
- Some clauses optional – others are required

DCU
Ollscoil Chathair
Bhaile Átha Cliath
Dublin City University

SQL Features

- SQL originally designed as an end-user text-based query language
  Modern and intuitive graphical front-ends can now be used, with SQL statements hidden from the user -> does not need to know SQL

- SQL can be embedded in language such as C, C++ and Java
  SQL provides a consistent interface with databases to developers

- SQL is both a data definition and data administration language
  SQL statements are used to define and create the data structures as well as operate on the data within. Structure and organization of an SQL database is stored within the database itself

- SQL protects data in a multiuser networked environment, using data validation, rollback, commits, data locking and multi user resolution issues

- As SQL is standard – it is mostly portable!

- SQL is very intuitive to use – bridges gap between admin and users

DCU
Ollscoil Chathair
Bhaile Átha Cliath
Dublin City University

SQL Standards

- Commercial implementations of SQL existed since 1979
- No official standard until 1986 – one published jointly between the American National Standard Institute (ANSI) and the International Standards Organization (ISO)
- Since then a number of standards and revisions:
- Further revisions: SQL2, SQL3, SQL:2003, SQL:2006, SQL:2008

DCU
Ollscoil Chathair
Bhaile Átha Cliath
Dublin City University

Table and Column Names

- If you specify a table name in an SQL statement, SQL assumes that you are referring to one of your own tables

- With proper permission you can refer to other users tables, by using a qualified table name

- Qualified table name specifies both the name of the table's owner and the name of the table separate by a "."

  Eg. JILL.VARIOUS

- When you specify a column name in an SQL statement, SQL can normally determine from the context which column you intend

- If statement involves two different columns with the same name from two different tables, you must use a qualified column name to identify the column you intend (see Joins for examples)

  Eg. JILL.VARIOUS.COLNAME1

DCU
Ollscoil Chathair
Bhaile Átha Cliath
Dublin City University

Data Types

- ANSI/ISO SQL standard specifies the types of data that can be stored in a SQL-based database

- Integers – ordinary numbers, quantities etc.
- Decimal Numbers – numbers with fractional parts, such as rates, %s
- Floating Point Numbers – scientific numbers etc.
- Fixed-Length Character Strings – store names, addresses etc.
- Variable Length Character Strings – data type allows a column to store character strings that vary in length up to a maximum length
- Dates and Times – details vary dramatically between vendors
- Money Amounts – many SQL products support a MONEY or CURRENCY type – DBMS can format money amounts when displayed
- Boolean Data – true or false; can be operated on with AND/OR etc.
- Long Text – columns which store long text strings (65,000 or larger) Database can store entire documents etc.
- Unstructured Byte Streams – used to store images, videos, executable code and other unstructured data (order of Mb or Gb)
- Asian Characters – 16 bit characters used to represent Asian chars

DCU
Ollscoil Chathair
Bhaile Átha Cliath
Dublin City University

Numeric Constants

- 78 3243.99 -99 +434899.1243 3.4E3 1.1E-8

String Constants

- ‘My Message in String Format’
- ‘DCU, Glasnevin, Dublin 9.’
- “I can’t”

Missing Data (NULL Values)

- Certain elements of information are not always available, are missing or don’t necessarily apply
- SQL supports missing, unknown or inapplicable data explicitly, through the concept of a null value
- NULL requires special handling by the DBMS – how do we handle the missing data in a table, when computing the sum of fields?
- Most databases include NULL/NOT_NULL attributes on table fields, indicating whether data can be omitted or not

DCU
Ollscoil Chathair
Bhaile Átha Cliath
Dublin City University

Database Structures and Schemas

- ANSI SQL standards make a strong distinction between the SQL Data Manipulation Language and Data Definition Language
- Primary reason for this was that it allowed the existence of static databases
- With a static database, DDL statements need not be accepted by the DBMS during its normal operation
- Traditional database products with static DDLs would follow the structure in the following diagram:

DCU
Ollscoil Chathair
Bhaile Átha Cliath
Dublin City University

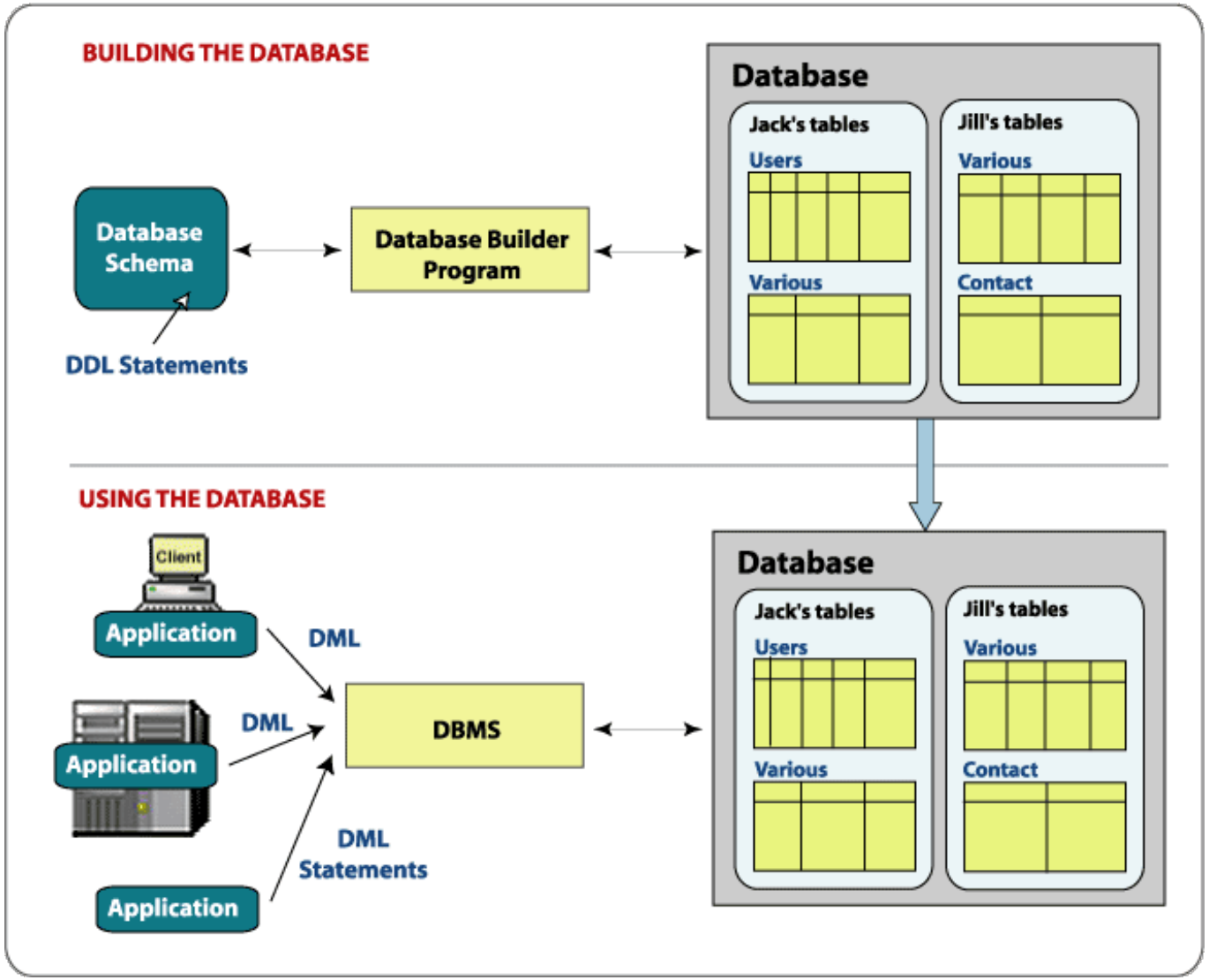

Ollscoil Chathair
Bhaile Átha Cliath
Dublin City University

Database Structures and Schemas

- Collections of tables are defined in a database schema, associated with a particular user
- Different users are distinguished from each other by unique usernames
- Different users can have tables with the same names -> use the qualified table names
- Each such unique space where the user works is called a schema
- SQL2 added new capabilities that meant changes could be made to the database structure at any time, not just when database is created
- Possible at later dates to change the existing table structures etc.

-> Schema is a high-level “container” for objects in an SQL2 database

DCU
Ollscoil Chathair
Bhaile Átha Cliath
Dublin City University

Database Structures and Schemas

- A schema is a named entity within the database and includes definitions for:
    - Tables
    - Views
    - .. others
- Will mostly look at Tables and Views – no time for others
- We want to focus on keeping business logic away from the database

DCU
Ollscoil Chathair
Bhaile Átha Cliath
Dublin City University

Data Manipulation Language

SELECT

- The SELECT Statement retrieves data from a database and returns it in the form of query results
- SELECT clause lists the data items to be retrieved
- FROM clause lists the table(s) that contain the data to be retrieved
- These tables are called the source tables of the query
- The WHERE clause tells SQL to include only certain rows of data in the query results
- A search condition is used to specify the desired rows
- Examples:

```
SELECT SURNAME FROM CUSTOMERS
SELECT SURNAME,FIRSTNAME FROM CUSTOMERS
```

DCU
Ollscoil Chathair
Bhaile Átha Cliath
Dublin City University

Select

- Example where we filter the results:

```
SELECT ID,SURNAME FROM CUSTOMERS
  WHERE COUNTRY="Ireland"
```

- Using the ORDER BY clauses we can sort the query results:

```
SELECT ID,SURNAME FROM CUSTOMERS
  WHERE COUNTRY="Ireland"
  ORDER BY SURNAME
```

- Can use shorthand '*' to indicate all columns:

```
SELECT * FROM CUSTOMERS
  WHERE COUNTRY="Scotland"
```

DCU
Ollscoil Chathair
Bhaile Átha Cliath
Dublin City University

INSERT

- SQL also allows the modification and updating of data in a database
- Database updates pose some more challenges to a DBMS compared to query statements
- DBMS must protect the integrity of the stored data during changes, ensuring valid data
- DBMS must coordinate simultaneous updates by multiple users, ensuring users and changes do not interfere with each other
- INSERT statement adds new rows of data to a table
- New row is typically added to a database when a new entity represented by the row “appears in the outside world”. Eg. Sales etc.

DCU
Ollscoil Chathair
Bhaile Átha Cliath
Dublin City University

INSERT

- Three separate ways of adding new rows of data to a database:

1. Single-row INSERT – statement adds a single row

2. Multi-row INSERT – statement extracts rows of data from another part of the database and adds them to a table. Eg. End-of-month/old data

3. Bulk load – utility adds data to a table from a file outside the database
   Eg. Initial loading of database, porting data

DCU
Ollscoil Chathair
Bhaile Átha Cliath
Dublin City University

Single Row Insert

- INTO clause specifies the target table that receives the new row
- VALUES clause specifies the actual data values for the new row
- Column list indicates which data value goes into which column

DCU
Ollscoil Chathair
Bhaile Átha Cliath
Dublin City University

Single Row Insert

- Examples:

```
INSERT INTO CUSTOMERS (ID,SURNAME,FIRSTNAME,EMAIL,COUNTRY,PHONE)
  VALUES (2312, “Kinsella”,”George”,”kinsellag@intel.com”,”Ireland”,”+353 1
3442103”)

INSERT INTO CUSTOMERS
  VALUES (2312,”Kinsella”,”George”,”kinsellag@intel.com”,”Ireland”,”+353 1
3442103”)
```

- If you omit the column list, you must explicitly use the NULL keyword in the values list to explicitly assign NULL values to columns. Eg.

```
INSERT INTO CUSTOMERS
  VALUES (2312,”Kinsella”,”George”, NULL,”Ireland”,NULL)

INSERT INTO CUSTOMERS (ID,SURNAME,FIRSTNAME,COUNTRY)
  VALUES (2312, “Kinsella”, “George”, “Ireland”)
```

- In practice, single row data inserts about a new customer, order etc. are almost always added to a database through a forms data entry program and webpage

DCU
Ollscoil Chathair
Bhaile Átha Cliath
Dublin City University

Multi-Row INSERT Statement

- Adds multiple rows of data to the target table
- Source of new rows is a query on existing rows

```
INSERT INTO IRISHCUSTOMERS
  SELECT * FROM CUSTOMERS
  WHERE COUNTRY='Ireland'
```

DCU
Ollscoil Chathair
Bhaile Átha Cliath
Dublin City University

Bulk Load Inserting

- Two main ways in which this is achieved:

1. Write a program which reads in records of a file and uses the single row INSERT statement to add the row to the table.

2. There is a large overhead involved in 1, so most DBMS products include a bulk load feature that loads data from a table at high speed

- Left up the the vendor-specific DBMS to handle

DCU
Ollscoil Chathair
Bhaile Átha Cliath
Dublin City University

DELETE Statement

- Row of data is typically deleted from a database when the entity represented by the row “disappears from the outside world”

- Smallest unit of data that can be deleted from a relational database is a single row (not fields!)

Eg.

```
DELETE FROM CUSTOMERS
```

(reminder: don’t do this now!)

```
DELETE FROM CUSTOMERS
  WHERE ID=2312
```

Ollscoil Chathair
Bhaile Átha Cliath
Dublin City University

DELETE Statement

- SQL applies the WHERE clauses to each row of the specified table, deleting those where the search condition yields a TRUE result and retaining those where the search condition yields a FALSE or NULL

- This type of delete often referred to as a SEARCH DELETE statement

```
DELETE from CUSTOMERS
        WHERE COUNTRY='Ireland'
```

DCU
Ollscoil Chathair
Bhaile Átha Cliath
Dublin City University

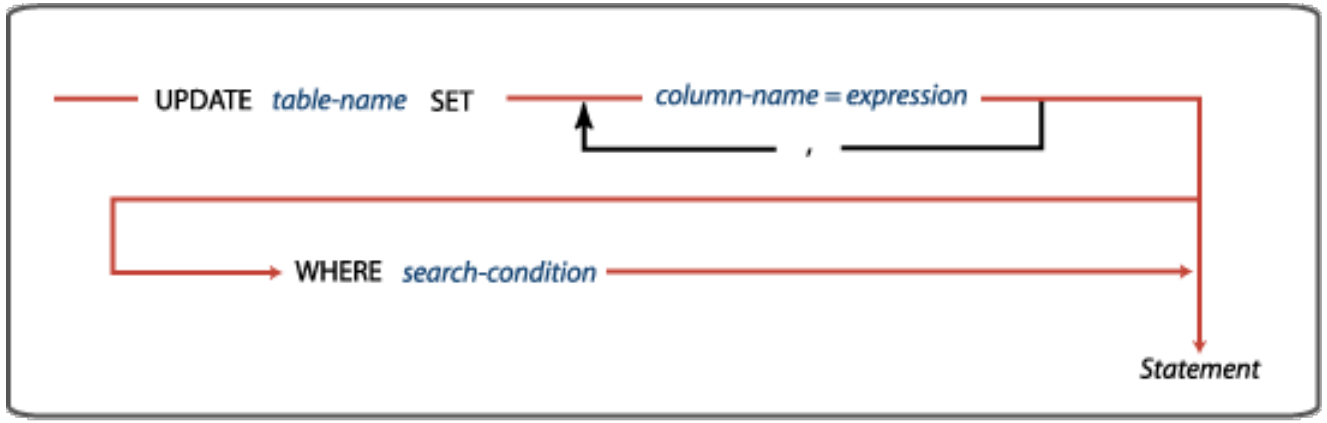

DCU
Ollscoil Chathair
Bhaile Átha Cliath
Dublin City University

Update Statement

- Eg.

```
UPDATE CUSTOMERS
   SET EMAIL="Peter.Smith@newcompany.com", COUNTRY="Germany"
   WHERE ID=2174

UPDATE CUSTOMERS
   SET COUNTRY="Eire"
   WHERE COUNTRY="Ireland"
```

- Using a WHERE clause works in same way as INSERT and sometimes called a SEARCHED UPDATE statement

- In its simplest form if you omit the WHERE clause, all rows will be updated

DCU
Ollscoil Chathair
Bhaile Átha Cliath
Dublin City University

More Advanced Queries

Duplicate Rows

- If a query includes the primary key of a table, every row will be unique
- If primary key not included, duplicate results can occur
- Eg.

```
SELECT CC FROM SALES
```

- To return each code just once, we can use DISTINCT

```
SELECT DISTINCT CC FROM SALES
```

DCU
Ollscoil Chathair
Bhaile Átha Cliath
Dublin City University

CUSTOMERS table

ID	SURNAME	FIRSTNAME	EMAIL	COUNTRY	PHONE
2174	Smith	Peter	smithp@lucent.com	Ireland	+353 1 4382321
2177	Murphy	Joe	joe.murphy@microsoft.com	Ireland	+353 97 34312
2099	Jones	Mary	mary.jones@hotmail.com	United States	+555 33 4444444
2200	McFadden	Jack	jack.mcfadden@dcu.ie	Scotland	+666 11 222222
2311	Corcoran	Sheila	scorco@ireland.com	Ireland	+353 1 8903242
1983	Ryan	Ann	ann.ryan@yahoo.com	England	+777 1 3234343

SALES table

SALE_ID	YEAR	CC	NUM	VALUE	SALESPERSON	PURCHASER
844122	90	C	15432	6100	Alan Malone	1983
584329	0	D	7733	12400	Lisa Smith	2200
993321	3	MH	7733	9500	Alan Malone	2099
666481	0	D	32909	12500	Roger Barry	2177
598020	2	C	4423	15800	Alan Malone	2174
384739	99	MH	90430	11200	Roger Barry	2311
348993	0	L	1733	10000	Lisa Smith	2177
667781	2	DL	6328	12400	Roger Barry	1983

CARS table

YEAR	COUNTYCODE	CNUMBER	MODEL	COLOUR	TRADEPRICE
0	D	7733	Honda Civic	Silver	10000
0	L	1733	Volkswagon Bora	Blue	9400
99	MH	90430	Toyota Avensis	Green	9600
90	C	15432	Toyota Corolla	Green	5600
95	KY	1061	Ford Fiesta	Grey	3900
0	D	32909	Ford Focus	Black	10300
2	DL	6328	Peugot 306	Red	12000
2	C	4423	Honda Civic	Silver	14500
3	MH	7733	Suzuki Swift	White	8100

More Advanced Queries

Range Test (BETWEEN)

```
SELECT * FROM SALES
    WHERE VALUE BETWEEN 0 and 10000

SELECT * FROM SALES
    WHERE VALUE NOT BETWEEN 0 and 1000
```

Membership Test (IN)

- Tests whether a data value matches one of a list of target values

```
SELECT * FROM CUSTOMERS
   WHERE COUNTRY IN (”Ireland”,”England”)
```

DCU
Ollscoil Chathair
Bhaile Átha Cliath
Dublin City University

More Advanced Queries

Pattern Matching Test

- Performs a simple comparison to retrieve rows where contexts of a text column match some particular text

- Can include one or more wildcard characters, such as % (0 or more characters)

```
SELECT * FROM CUSTOMERS
  WHERE COUNTRY LIKE “%land”

SELECT * FROM CUSTOMERS
  WHERE PHONE LIKE “+353 1 %”
```

NULL Value Test

- Checks explicitly for NULL values

```
SELECT * FROM CUSTOMERS WHERE EMAIL IS NULL
```

DCU
Ollscoil Chathair
Bhaile Átha Cliath
Dublin City University

More Advanced Queries

Compound Search Conditions (AND, OR, and NOT)

- Simple search conditions can return a value of TRUE, FALSE or NULL

- Can combine these simple SQL search conditions to form more complex search conditions:

```
SELECT * FROM CUSTOMERS
  WHERE COUNTRY = 'Ireland'
  AND SURNAME='Smith'

SELECT * FROM CUSTOMERS
  WHERE COUNTRY='Ireland'
  OR EMAIL LIKE '%dcu.ie'

SELECT * FROM SALES
  WHERE NOT VALUE < 10000
```

DCU
Ollscoil Chathair
Bhaile Átha Cliath
Dublin City University

More Advanced Queries

Combining Query Results (UNION)

- Often convenient to combine the results of two or more queries into a single table of query results

```
SELECT * FROM STAFFUSERS
  UNION
SELECT * FROM STUDENTUSERS
  UNION
SELECT * FROM RESEARCHUSERS
```

- Restrictions on the use of the UNION operation:

  - All tables must contain the same number of columns
  - Data type of each column must match the data types in corresponding table in the UNION
  - Neither table can be sorted by an ORDER BY clause. However, the combined query results can be sorted

DCU
Ollscoil Chathair
Bhaile Átha Cliath
Dublin City University

More Advanced Queries

Column Functions

- SQL column functions take an entire column of data as its argument and creates a single data item that summarizes the column

- In the standard, following are available:

SUM(), AVG(),MIN(),MAX(),COUNT() and COUNT(*)

```
SELECT AVG(VALUE)
   FROM SALES

SELECT COUNT(*)
  FROM CUSTOMERS
  WHERE COUNTRY='Ireland'
```

DCU
Ollscoil Chathair
Bhaile Átha Cliath
Dublin City University

More Advanced Queries

Grouped Queries and Group Search Conditions

- Typically, column functions return a single row of data, such as an average or sum. Eg.

```
SELECT AVG(SALES_TOTAL)
  FROM COMPANYSALES                    (fictional table)

returning:

AVG(SALES_TOTAL)
------------------------
  8532.39
```

- However, if we wish to get average sales for year for each salesperson

```
SELECT SALESPERSON_ID, AVG(SALES_TOTAL)
  FROM COMPANYSALES
  GROUP BY SALESPERSON_ID
```

DCU
Ollscoil Chathair
Bhaile Átha Cliath
Dublin City University

More Advanced Queries

Grouped Queries and Group Search Conditions

might return:

```
SALESPERSON_ID          AVG(SALES_TOTAL)
----------------------  ------------------------
            A32                     6512.31
            A36                     10334.92
            A23                     3932.11
            ...                     ...
```

- Therefore, we get one row for each group!

- Like WHERE, we can use HAVING to select and reject row groups:

```
SELECT SALESPERSON_ID, AVG(SALES_TOTAL)
  FROM COMPANYSALES
  GROUP BY SALESPERSON_ID
  HAVING SUM(SALES_TOTAL) > 10000
```

DCU
Ollscoil Chathair
Bhaile Átha Cliath
Dublin City University

More Advanced Queries

Multi-Table Queries (Joins)

- Many useful queries result from data from two or more tables in a database

- Process of forming pairs of rows by matching the contents of related columns is called joining the tables

- Eg. To get a table of car registration numbers and their respective owners we can do the following:

```
SELECT YEAR,CC,NUM,SURNAME,FIRSTNAME,VALUE
  FROM SALES,CUSTOMERS
  WHERE PURCHASER=ID
```

- This can be represented by the diagram on the next slide

DCU
Ollscoil Chathair
Bhaile Átha Cliath
Dublin City University

CUSTOMERS table

ID	SURNAME	FIRSTNAME	EMAIL	COUNTRY	PHONE
2174	Smith	Peter	smithp@lucent.com	Ireland	+353 1 4382321
2177	Murphy	Joe	joe.murphy@microsoft.com	Ireland	+353 97 34312
2099	Jones	Mary	mary.jones@hotmail.com	United States	+555 33 4444444
2200	McFadden	Jack	jack.mcfadden@dcu.ie	Scotland	+666 11 222222
2311	Corcoran	Sheila	scorco@ireland.com	Ireland	+353 1 8903242
1983	Ryan	Ann	[illegible]yahoo.com	England	+777 1 3234343

SALES table

SALE_ID	YEAR	CC	NUM	VALUE	SALESPERSON	PURCHASER
844122	90	C	15432	6100	Alan Malone	1983
584329	0	D	7733	12400	Lisa Smith	2200
993321	3	MH	7733	9500	Alan Malone	2099
666481	0	D	32909	12500	Roger Barry	2177
598020	2	C	4423	15800	Alan Malone	2174
384739	99	MH	90430	11200	Roger Barry	2311
348993	0	L	1733	10000	Lisa Smith	2177
667781	2	DL	6328	12400	Roger Barry	1983

YEAR	CC	NUM	SURNAME	FIRSTNAME	VALUE
90	C	15432	Ryan	Ann	6100
0	D	7733	McFadden	Jack	12400
3	MH	7733	Jones	Mary	9500
...	...	...	...	...	...

Ollscoil Chathair
Bhaile Átha Cliath
Dublin City University

More Advanced Queries

Multi-Table Queries (Joins)

- The search condition (WHERE PURCHASER=ID) compares columns from two different tables are are called the matching columns for the two tables

- Naturally, we can further add row select criteria into multi-table joins

```
SELECT YEAR,CC,NUM,FIRSTNAME,SURNAME,VALUE
  FROM SALES,CUSTOMERS
  WHERE PURCHASER=ID
  AND CC='C'
```

- For important reasons we frequently need to use table aliases. Consider where we are joining from multiple tables, with identical column names (legal!) or accessing identically-named tables from different user schemas -> We use qualified names and/or aliases

DCU
Ollscoil Chathair
Bhaile Átha Cliath
Dublin City University

More Advanced Queries

Multi-Table Queries (Joins)

- Using qualified table and column names:

```
SELECT STAFF.SURNAME, STAFF.FIRSTNAME, ANOTHERUSER.MODULES.CODE,
ANOTHERUSER.MODULES.NAME
        FROM STAFF,ANOTHERSER.MODULES
        WHERE STAFF.ID=ANOTHERUSER.MODULES.OWNERID
```

- Using aliases we can write this much simpler:

```
SELECT S.SURNAME,S.FIRSTNAME, M.CODE, M.NAME
        FROM STAFF S,ANOTHERUSER.MODULES M
        WHERE S.ID=M.OWNERID
```

- Can see how, if columns had the same name, they are identified

- These joins called inner joins -> outer (information preserving) joins not covered in this module

DCU
Ollscoil Chathair
Bhaile Átha Cliath
Dublin City University

Data Integrity

- Data Integrity refers to the correctness and completeness of the data in a database

- When a Data Manipulation Statement (INSERT, DELETE or UPDATE) is used and the contents of tables are changed, the integrity of data can be lost in numerous ways

- To preserve consistency and correctness, a relational DBMS typically imposes one or more data integrity constraints

- Several Different types of data integrity constraints are commonly found in relational databases, including:

    - Required Data
    - Entity Checking
    - Referential Integrity
    - Consistency

DCU
Ollscoil Chathair
Bhaile Átha Cliath
Dublin City University

Data Integrity

Required Data

- Simplest data integrity requires that a column contain a non-NULL value. Most DBMS products support this by allowing you to declare that a column is NOT NULL, when creating the table
- Every INSERT must specify a non-NULL data value for the column
- Every UPDATE statement must assign it a non-NULL data value
- Slight disadvantage of this constraints, is that it must be specified when a table is first created
- Typically not a problem, as it is typically obvious which columns should allow NULLs and which should not

DCU
Ollscoil Chathair
Bhaile Átha Cliath
Dublin City University

Data Integrity

Entity Integrity

- A table's primary key must have a unique value for each row of the table or database loses its integrity as a model of the outside world
- Requirement of unique primary keys is called the entity integrity constraint
- When a primary key is specified for a table, the DBMS automatically checks the uniqueness of the primary key values for every INSERT or UPDATE
- Sometimes appropriate to require non-primary key columns to contain a unique value also
- -> We can impose a uniqueness constraint on any column such as EMAIL or USERNAME etc.
- DBMS require that primary keys are defined automatically as NOT NULL

DCU
Ollscoil Chathair
Bhaile Átha Cliath
Dublin City University

Data Integrity

Referential Integrity

- Consider again our parent/child, primary/foreign key relationship shown in the diagram overleaf
- The PURCHASER column is a foreign key for the CUSTOMERS table
- Consider the following INSERT statement:

```
INSERT INTO SALES (SALE_ID,YEAR,CC,NUM,VALUE,SALESPERSON,PURCHASER)
 VALUES (534327, 99, ”D”,8432,14000,”John Malone”,2167)
```

- Statement is correctly syntaxed, so could be expected to work
- But there is no entry in the CUSTOMERS table with ID=2167

-> We are attempting to break the parent child relationship as defined by our primary key/foreign key relation

DCU
Ollscoil Chathair
Bhaile Átha Cliath
Dublin City University

CUSTOMERS table

ID	SURNAME	FIRSTNAME	EMAIL	COUNTRY	PHONE
2174	Smith	Peter	smithp@lucent.com	Ireland	+353 1 4382321
2177	Murphy	Joe	joe.murphy@microsoft.com	Ireland	+353 97 34312
2099	Jones	Mary	mary.jones@hotmail.com	United States	+555 33 4444444
2200	McFadden	Jack	jack.mcfadden@dcu.ie	Scotland	+666 11 222222
2311	Corcoran	Sheila	scorco@ireland.com	Ireland	+353 1 8903242
1983	Ryan	Ann	ann.ryan@yahoo.com	England	+777 1 3234343

PRIMARY KEY

SALES table

SALE_ID	YEAR	CC	NUM	VALUE	SALESPERSON	PURCHASER
844122	90	C	15432	6100	Alan Malone	1983
584329	0	D	7733	12400	Lisa Smith	2200
993321	3	MH	7733	9500	Alan Malone	2099
666481	0	D	32909	12500	Roger Barry	2177
598020	2	C	4423	15800	Alan Malone	2174
384739	99	MH	90430	11200	Roger Barry	2311
348993	0	L	1733	10000	Lisa Smith	2177
667781	2	DL	6328	12400	Roger Barry	1983

PRIMARY KEY

FOREIGN KEY

DCU
Ollscoil Chathair
Bhaile Átha Cliath
Dublin City University

Data Integrity

Referential Integrity

- Every legal value in the PURCHASER column in SALES is forced to match an existing value in the ID column of the CUSTOMERS table

- We call this a Referential Integrity constraint

- Four types of database updates that can corrupt the referential integrity of the parent/child relationship in a database

1. Inserting a new child row – new entry in child table, foreign key must match a primary key in the parent -> otherwise, we create an orphan
2. Updating the foreign key in a child row – similar to 1. except modifying
3. Deleting a parent row – if a row in parent table (with children) is deleted, the child rows will become orphans. Child foreign keys will no longer match any primary
4. Updating a parent row – as in 3. except where the primary key is updated

DCU
Ollscoil Chathair
Bhaile Átha Cliath
Dublin City University

Data Integrity

Referential Integrity

- First two situations can be handled by simply checking the values in columns to see if they are legitimate
- Last two are handled in SQL2 by the Delete and Update Rules
- DELETE and UPDATE rules tell the DBMS what to do when the user tries to delete or update a row in the parent table

DCU
Ollscoil Chathair
Bhaile Átha Cliath
Dublin City University

Data Integrity

Referential Integrity

DELETE AND UPDATE Rules – 4 rules

- RESTRICT/NO ACTION = prevents you from changing a primary key/ deleting a row from the parent table if the row has any children

- CASCADE = tells the DBMS that when a parent row is deleted, all of its child rows should be deleted. If the primary key is changed in an UPDATE, all corresponding foreign key values in child table should be likewise changed

- SET NULL – tells the DBMS that when a parent row is deleted, the foreign key values in all its child rows should be set to NULL. For an UPDATE the same occurs

- SET DEFAULT – foreign key values of all child rows should be set to the default value for that particular column (specified on creation)

DCU
Ollscoil Chathair
Bhaile Átha Cliath
Dublin City University

Consistency - Transactions

- Last form of data integrity is that of consistency

- Many real-world transactions cause multiple updates to a database and all of these updates must occur in order for the database to remain in a consistent and accurate state

- DBMS systems handle these situations using transactions, which are sequences of one or more SQL statements that together form a logical unit of work

- Grouping statements as single transactions tells the DBMS that the entire statement sequence should be executed atomically – all of the statements MUST be completed for the database to be consistent

COMMIT – signals a successful end of a transaction

ROLLBACK – signals an unsuccessful end of a transaction and tells the DBMS to back out any changes made to the database during the transaction, restoring the database to its original state before transaction

DCU
Ollscoil Chathair
Bhaile Átha Cliath
Dublin City University

Consistency - Transactions

- Consider an example sales system tables

ORDERS

ORDERID	ITEMID	QTY	AMOUNT	REP_ID
4333292	4389BZ	2	1,100	360
4340020	106LX	25	1,750	124

SALESREPS

IDENT	NAME	SALES
124	Derek Scanlon	124,870
360	Janice Kray	189,230

STOCK

ID	NAME	QTY	PRICE
4389BZ	HP Laserjet 500P	16	550
106LX	N300P Print Cartridge	532	70

- If an order is placed we want to:
  - Add the entry to the ORDERS table (INSERT)
  - Decrement the relevant STOCK entry by the quantity ordered (UPDATE)
  - Increment the sales total for the sales representative (UPDATE)

DCU
Ollscoil Chathair
Bhaile Átha Cliath
Dublin City University

Consistency - Transactions

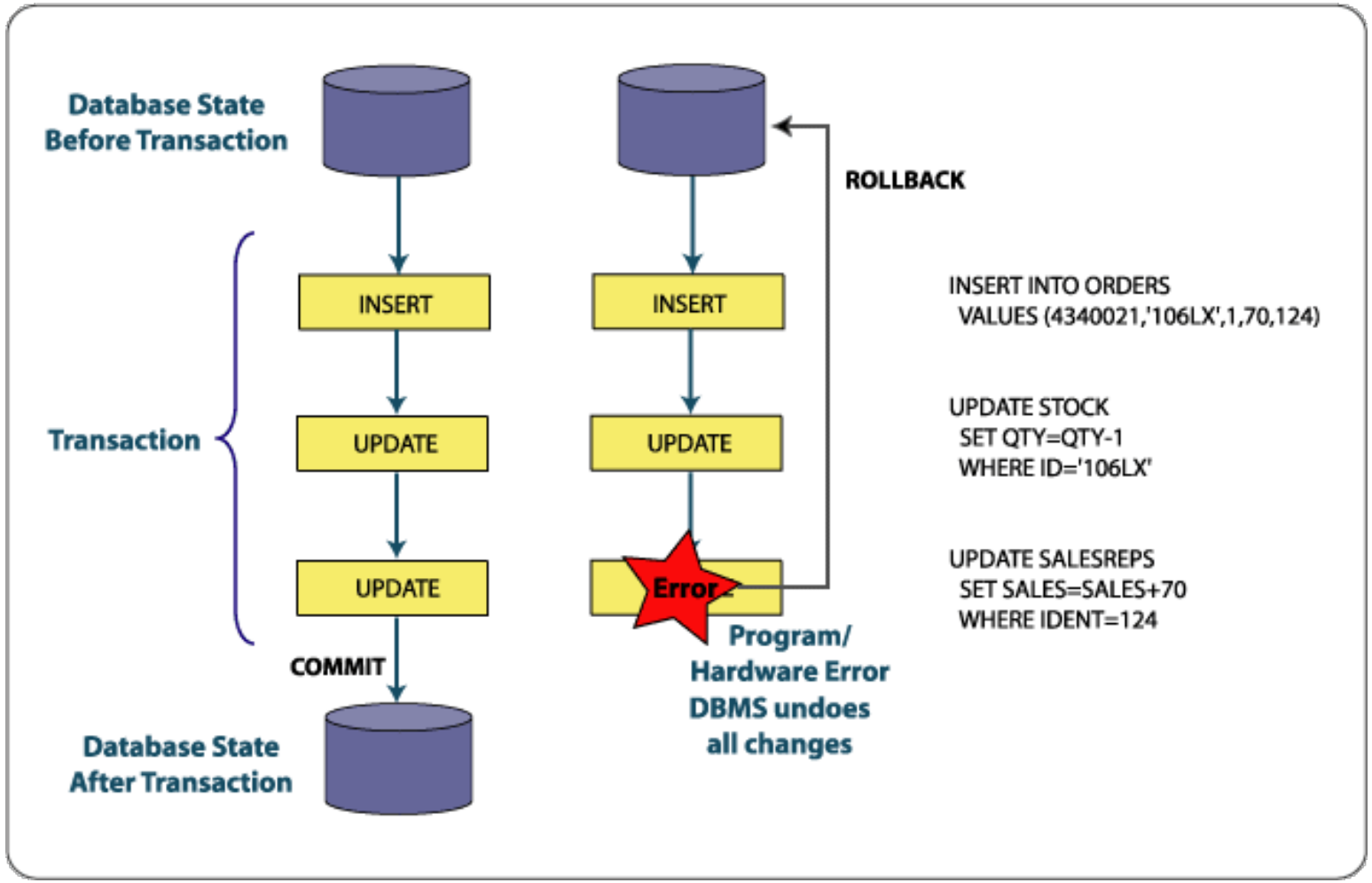

Ollscoil Chathair
Bhaile Átha Cliath
Dublin City University

Data Definition Language

- Most users do not have to worry about creating a database, they are either end users just doing queries or database is transparent

- Unfortunately you do ⏸

- SELECT,INSERT,DELETE,UPDATE,COMMIT and ROLLBACK are all concerned with the manipulation of data

- Changes to the structure of the database are handled by a different set of SQL statements, called the SQL Data Definition Language (DDL)

- As examples:

  - Define and create a new table
  - Remove an existing table
  - Change the structure of an existing table
  - Build an index to access table data faster
  - Establish security controls for a database
  - Create a database view

DCU
Ollscoil Chathair
Bhaile Átha Cliath
Dublin City University

Data Definition Language

- Core of the Data Definition Language is based on three SQL verbs: CREATE, DROP and ALTER

- In all major SQL-based DBMS products, the database structure is dynamic -> we can create, drop and change the structure of the database, while simultaneously providing access to users

- Major advantage over older systems, where database needed to be shut down

DCU
Ollscoil Chathair
Bhaile Átha Cliath
Dublin City University

Data Definition Language

CREATE TABLE

- Creates a new table structure within your schema in the database and prepares it to accept data (with INSERT)

- Columns are defined within the CREATE TABLE defintion, such as:

  Column name – used to subsequently refer to the column
  Data Type – identifying the kind of data allowed
  Required Data – NOT NULL prevents NULL values in the column
  Optional Default Value – Used when later INSERTS don't specify a value

- CREATE TABLE statements for a given table can vary slightly from one DBMS brand to another, due to differing data types and keywords

- Following syntaxes closest to the standard and work with MySQL and Oracle (at least)

DCU
Ollscoil Chathair
Bhaile Átha Cliath
Dublin City University

Data Definition Language

CREATE TABLE

SALES table

YEAR	COUNTYCODE	NUMBER	MODEL	PURCHASER
90	C	15432	Toyota Corolla	1983
0	D	7733	Honda Civic	2200
3	MH	7733	Suzuki Swift	2099
0	D	32909	Ford Focus	2177
2	C	4423	Honda Civic	2174
99	MH	90430	Toyota Avensis	2311
1	D	487	Volkswagon Bora	2177
2	DL	6328	Peugot 306	1983

CUSTOMERS table

ID	SURNAME	FIRSTNAME	EMAIL	COUNTRY	PHONE
2174	Smith	Peter	smithp@lucent.com	Ireland	+353 1 4382321
2177	Murphy	Joe	joe.murphy@microsoft.com	Ireland	+353 97 34312
2099	Jones	Mary	mary.jones@hotmail.com	United States	+555 33 4444444
2200	McFadden	Jack	jack.mcfadden@dcu.ie	Scotland	+666 11 222222
2311	Corcoran	Sheila	scorco@ireland.com	Ireland	+353 1 8903242
1983	Ryan	Ann	ann.ryan@yahoo.com	England	+777 1 3234343

Data Definition Language

CREATE TABLE

```
CREATE TABLE CUSTOMERS
(ID INTEGER,
 SURNAME VARCHAR(30) NOT NULL,
 FIRSTNAME VARCHAR(30) NOT NULL,
 EMAIL VARCHAR(80),
 COUNTRY VARCHAR(30) DEFAULT 'Ireland',
 PHONE VARCHAR(25),
 PRIMARY KEY (ID))

CREATE TABLE SALES
(SALE_ID INTEGER,
 YEAR INTEGER NOT NULL,
 CC VARCHAR(2) NOT NULL,
 NUM INTEGER NOT NULL,
 VALUE INTEGER NOT NULL,
 SALESPERSON VARCHAR(100),
 PURCHASER INTEGER,
 PRIMARY KEY (SALE_ID),
 CONSTRAINT CONSTNAME1
    FOREIGN KEY (PURCHASER)
    REFERENCES CUSTOMERS(ID)
    ON DELETE SET NULL)
```

DCU
Ollscoil Chathair
Bhaile Átha Cliath
Dublin City University

Data Definition Language

CREATE TABLE Example 2

ORDERS

ORDERID	ITEMID	QTY	AMOUNT	REP_ID
4333292	4389BZ	2	1,100	360
4340020	106LX	25	1,750	124

SALESREPS

IDENT	NAME	SALES
124	Derek Scanlon	124,870
360	Janice Kray	189,230

STOCK

ID	NAME	QTY	PRICE
4389BZ	HP Laserjet 500P	16	550
106LX	N300P Print Cartridge	532	70

DCU
Ollscoil Chathair
Bhaile Átha Cliath
Dublin City University

Data Definition Language

CREATE TABLE Example 2

```
CREATE TABLE STOCK
(ID VARCHAR(10),
NAME VARCHAR(200) NOT NULL,
QTY INTEGER DEFAULT 0,
PRICE INTEGER NOT NULL,
PRIMARY KEY (ID))
```

```
CREATE TABLE SALESREPS
(IDENT INTEGER,
NAME VARCHAR(50) NOT NULL,
SALES INTEGER NOT NULL,
PRIMARY KEY (IDENT),
UNIQUE (NAME))
```

```
CREATE TABLE ORDERS
(ORDERID INTEGER,
ITEMID VARCHAR(10) NOT NULL,
QTY INTEGER DEFAULT 1,
AMOUNT INTEGER NOT NULL,
REP_ID INTEGER,
PRIMARY KEY (ORDERID),
  CONSTRAINT CNST1
      FOREIGN KEY (ITEMID)
      REFERENCES STOCK
      ON DELETE CASCADE,
  CONSTRAINT CNST2
      FOREIGN KEY (REP_ID)
     REFERENCES SALESREPS
     ON DELETE SET NULL)
```

DCU
Ollscoil Chathair
Bhaile Átha Cliath
Dublin City University

Database Schema Diagrams

- Provide the data model for our database showing structure and relationships

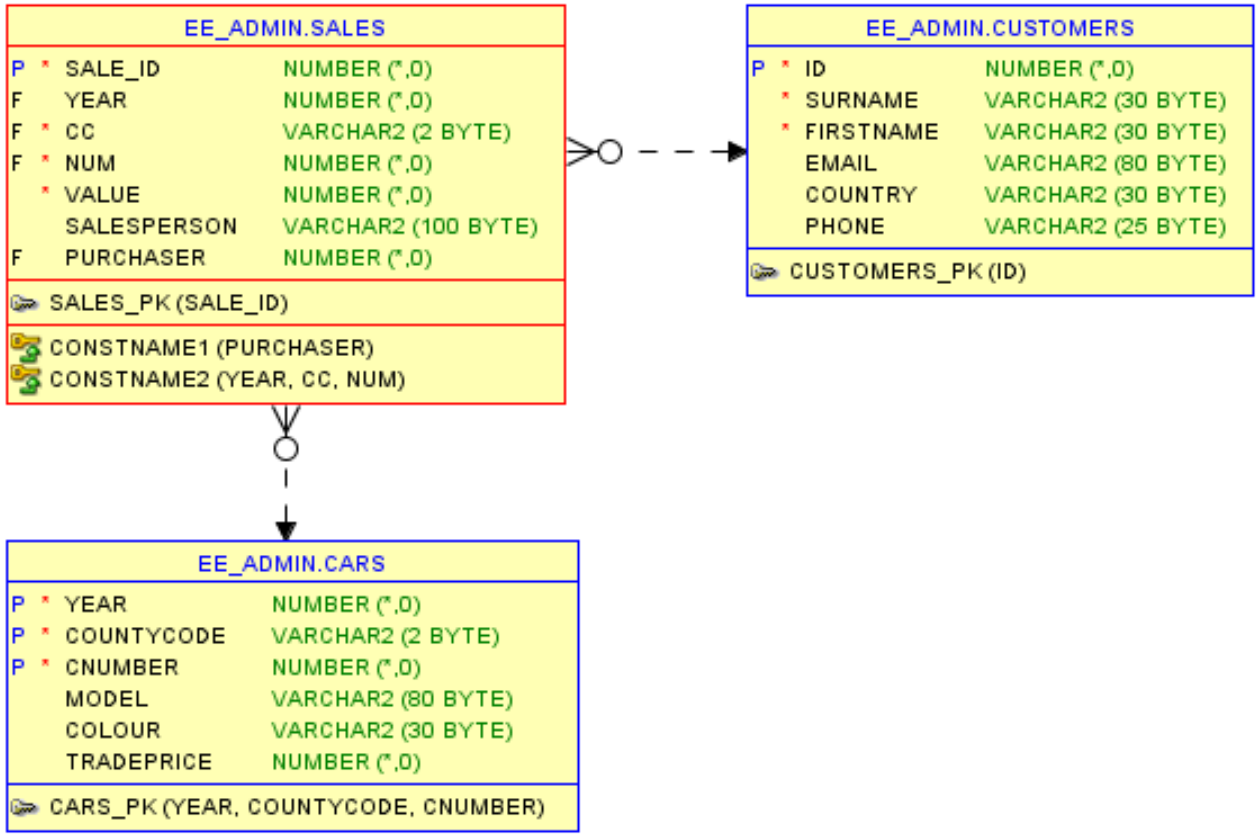

Ollscoil Chathair
Bhaile Átha Cliath
Dublin City University

Data Definition Language

DROP TABLE

Eg.

```
DROP TABLE CUSTOMERS
DROP TABLE JILL.VARIOUS
```

ALTER TABLE

Eg.

```
ALTER TABLE CUSTOMERS
   ADD MOBILE_NO VARCHAR(30)

ALTER TABLE CUSTOMERS
   DROP MOBILE_NO
```

DCU
Ollscoil Chathair
Bhaile Átha Cliath
Dublin City University

Data Definition Language

Aliases

- Most DBMS provide an ‘alias’ or ‘synonym’ capability
- Fully qualified table or column name → simple alias for ease of use

Eg.

```
CREATE ALIAS PHONES
  FOR JILL.VARIOUS.PHONE_NO

DROP ALIAS PHONES
```

- In Oracle, we replace the word ‘Alias’ with ‘Synonym’

DCU
Ollscoil Chathair
Bhaile Átha Cliath
Dublin City University

Data Definition Language

Indexes

- An Index is a structure that provides rapid access to the rows of the table, based on the values of one or more columns

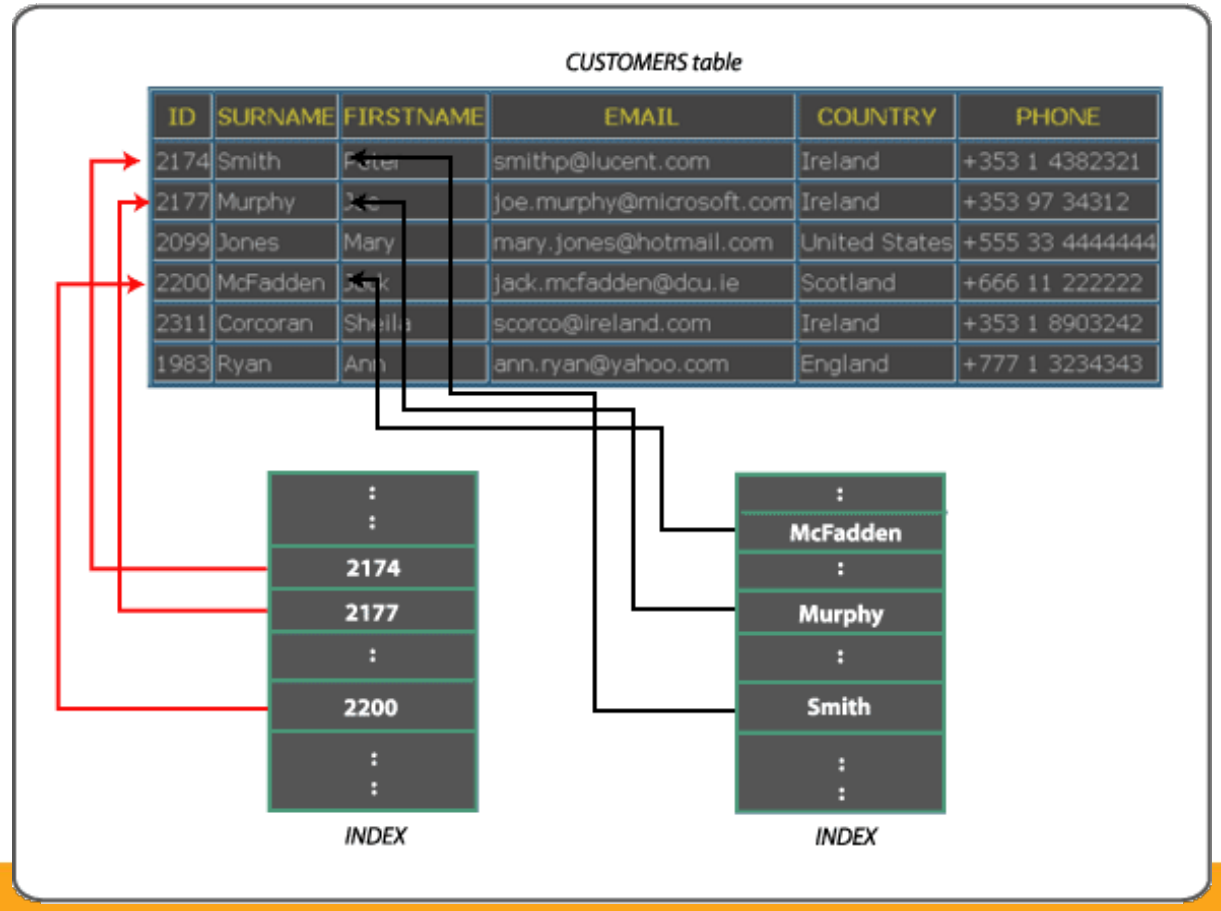

Ollscoil Chathair Bhaile Átha Cliath
Dublin City University

Data Definition Language

Indexes

```
CREATE INDEX CUST_ID
  ON CUSTOMERS (ID)

SELECT FIRSTNAME FROM CUSTOMERS WHERE ID=2177

DROP INDEX CUST_ID
```

- DBMS uses indexes like the indexes in a book
- Data values are arranged in ascending or descending order to improve speed of DBMS searches
- Rather than searching through all of the data in every row of a table, it searches the INDEX for the value and follows the pointer to the requested row

DCU
Ollscoil Chathair
Bhaile Átha Cliath
Dublin City University

Data Definition Language

Indexes

- Indexes are transparent to the user who access the table

- Disadvantage: the index is kept sperately so
  - consumes additional disk space
  - extra overhead on INSERTS and UPDATES

- SQL2 Standard does not provide an implementation for indexes, but most use a format such as on previous slides

DCU
Ollscoil Chathair
Bhaile Átha Cliath
Dublin City University

Data Definition Language

Views

- A view is a *virtual table* whose contents are defined by a query

- View appears like a real table to a user

- Two types of views:

  - Horizontal: Users restricted to only selected rows of a table
    Eg.

```
CREATE VIEW IRISHCUSTOMERS AS
SELECT * FROM CUSTOMERS
WHERE COUNTRY='Ireland'
```

  - Vertical: Users can be restricted to certain columns of a table
    Eg.

```
CREATE VIEW CUSTOMER_NAMES AS
SELECT ID, SURNAME, FIRSTNAME FROM CUSTOMERS
```

DCU
Ollscoil Chathair
Bhaile Átha Cliath
Dublin City University

Data Definition Language

Views Advantages

- Security – restrict users to applicable data
- Query Simplicity – provides simple access to underlying multiple tables
- Structural Simplicity – Tables make sense for a particular user
- Insulation from Change – Underlying source tables can change
- Data Integrity – DBMS checks data for underlying integrity constraints

Views Disadvantages

- Performance – views appear like tables but DBMS still must translate queries against the underlying source tables -> performance
- Update Restrictions – if underlying tables are complex, some DBMS might treat certain Views as ‘read only’

DCU
Ollscoil Chathair
Bhaile Átha Cliath
Dublin City University

Data Definition Language

Database Security

- Authorised users can provide various levels of access to other users:

```
GRANT SELECT,UPDATE
ON CUSTOMERS
TO EE_USER
```

- Likewise, privilages can be rescinded using:

```
REVOKE SELECT,UPDATE
ON CUSTOMERS
FROM EE_USER
```

- Can assign privilages on individual colums

```
GRANT UPDATE (EMAIL,PHONE), SELECT
ON CUSTOMERS TO EE_USER
```

DCU
Ollscoil Chathair
Bhaile Átha Cliath
Dublin City University